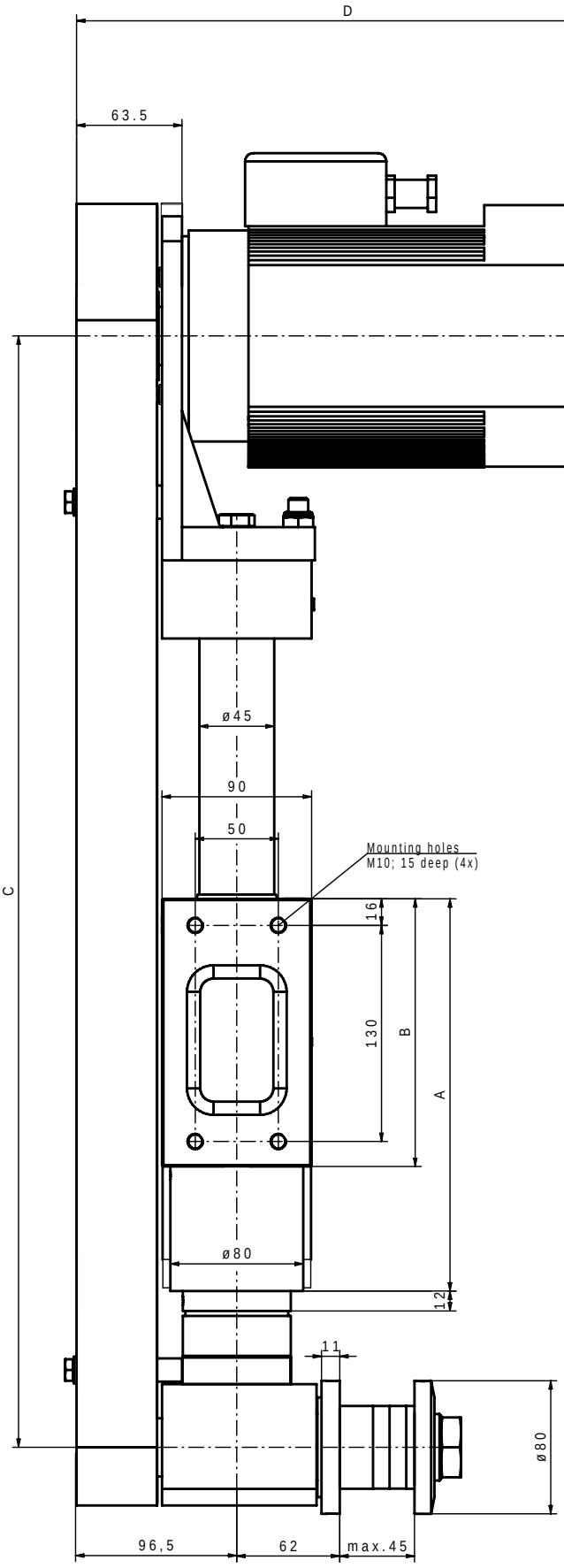

Shown is the unit
with 2.2 kW - 150 mm stroke
Execution LEFT

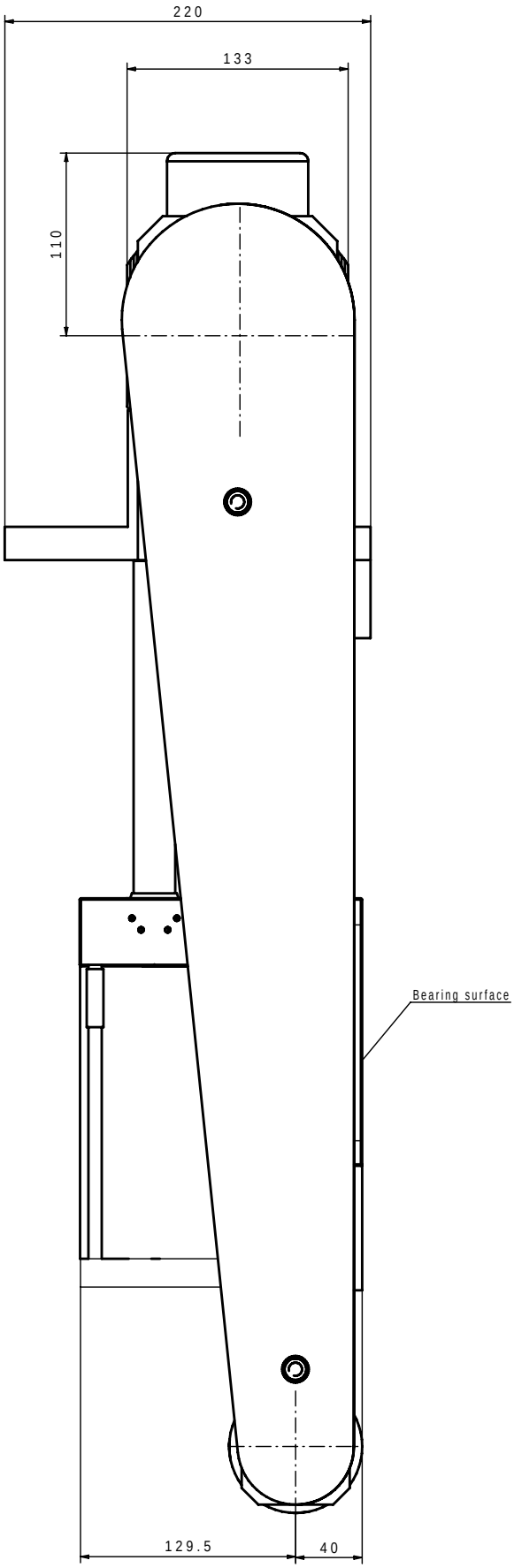
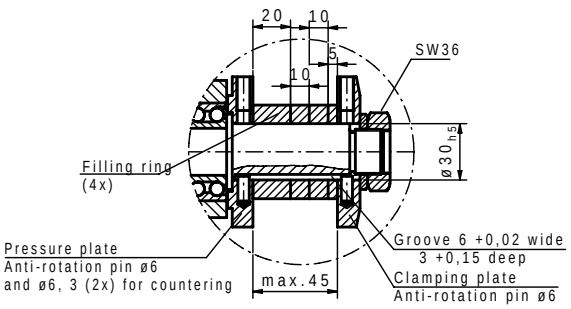
Milling receptacle